YLI ELECTRONIC

Door Loop for Mortise Mounting

Model: DLK-402/402L

Basic Instruction

Door loop is made of excellent material,Seiko quality,Special design,Applicable to use for access control,to protect the wire when install the elctric lock,magnetic contact,alarm button on the door, convenient and beautiful.

Specification

DLK-402

Size: 290Lx25Wx12H(mm)DIA
Suitable Range: Prevent the wire from malicious damage
Standard Structure: Alloy Materail, Thickened Ripple Tube
Finished for Shell: Painted by high temperature
Weight: 0.27kg

DLK-402L

Size: 542Lx24Wx17H(mm)DIA
Suitable Range: Prevent the wire from malicious damage
Standard Structure: Alloy Materail, Thickened Ripple Tube
Finished for Shell: Painted by high temperature
Weight: 0.4kg

Dimension

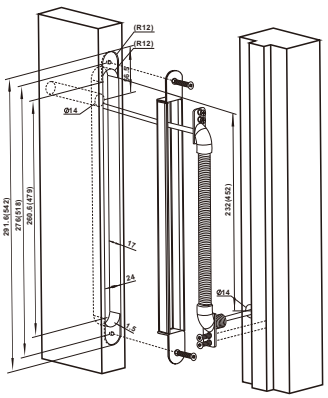

DLK-402/(DLK-402L)

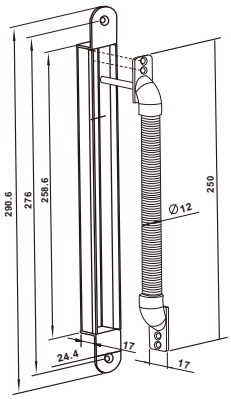

DLK-402

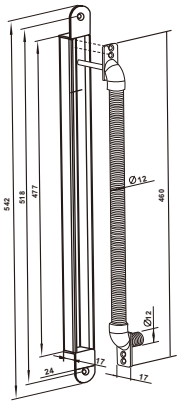

DLK-402L

Installation

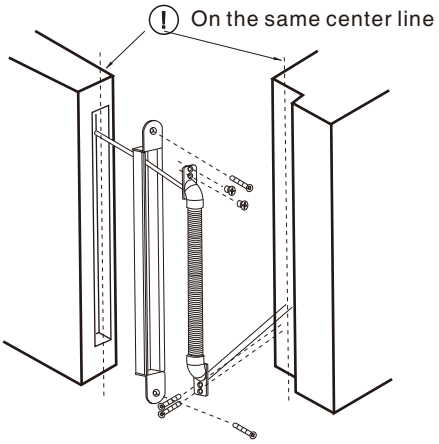

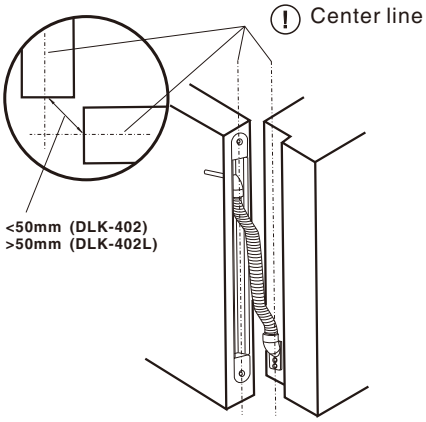

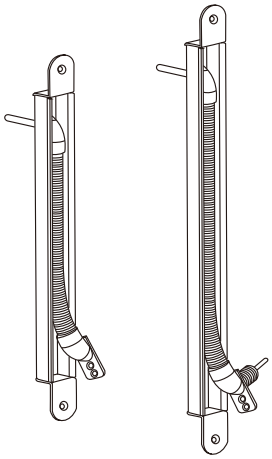

DLK-402,DLK-402L